11-VS2T123-00004X

符号 NO.	部品名称 PART NAME	材料 MATERIAL	数量 Q'TY	備考 REMARKS
V50-11	BEARING PEDESTAL	SS400	1	
V50-11a	HEXAGON HEAD BOLT	SUS304	1 SET	
V50-12	DRIVER PEDESTAL	SS400	1	
V50-12a	HEXAGON HEAD BOLT	SUS304	1 SET	
V50-12b	HEXAGON HEAD BOLT	SUS304	1 SET	
V50-13	ADAPUTER PLATE	SS400	1	
V50-13a	HEXAGON HEAD BOLT	SUS304	1 SET	
V50-14	ALIGNMENT PIECE	SS400	4	JACK BOLT SUS304
V54-11	PUMP BASE	SS400	1	
V80-11	FOUNDATION BOLT	SUS304	4 SETS	WITH NUT & WASHER
VE2-01	SACRIFICIAL ANODE	ALUMINUM ALLOY	6	
VE2-02	ATTACHMENT LUG	SUS304	12	
VE3	SHAFT BONDING ASSY	CARBON	1 SET	

※1 COUPLING KEY : SUPPLIED BY MOTOR

符号 NO.	部品名称 PART NAME	材料 MATERIAL	数量 Q'TY	備考 REMARKS
V25-11	DISCHARGE ELBOW	SUS316L	1	
V25-11a	HEXAGON HEAD BOLT	SUS316	1 SET	
V25-12	ELBOW PLATE	SS400	1	
V25-12a	HEXAGON HEAD BOLT	SUS304	1 SET	
V26-11	BEARING SPIDER	SUS316L	6	
V26-12	SUBMERGED BEARING	PTFE/RUBBER	6	SHELL: SUS316
V30-01	BALL BEARING	SUJ2	1	
V30-11	BEARING HOUSING	SS400	1	
V30-11a	HEXAGON HEAD BOLT	SUS304	1 SET	
V30-12	BEARING COVER	SS400	1	
V30-13	GREASE RETAINER	SS400	1	
V30-14	BEARING ADAPTER	SS400	1	
V30-15	ADJUST NUT	S45C	1	
V30-16	DEFRECTOR	PVC	1	LOWER
V30-17	DEFRECTOR	PVC	1	UPPER
V30-18	GREASE GUIDE	SS400	1	
V30-19	RETAINING RING	SWRH	1	
V30-20	KEY	S45C	1	
V40-11	STUFFING BOX	SCS14	1	
V40-11a	STUD BOLT	SUS304	1 SET	WITH NUT
V40-12	PACKING GLAND	SCS14	1	SPLIT
V40-12a	STUD BOLT	SUS316	1 SET	
V40-13	GLAND PACKING	CARBON FIBER	4	□12.7 PILLER-6521L
V40-14	NECK BUSH	SUS316	1	
V40-21	"O"RING	NBR	1	JIS B2401 G100

符号 NO.	部品名称 PART NAME	材料 MATERIAL	数量 Q'TY	備考 REMARKS
V15-11	INTERMEDIATE SHAFT COUPLING	SUS316	6	
V15-12	SPLIT RING	SUS316	6 SETS	SPLIT
V15-13	SHAFT GUIDE PIECE	SUS316	6	
V21-11	SUCTION CASING	SCS14	1	
V21-11a	HEXAGON HEAD BOLT	SUS316	1 SET	WITH NUT
V21-12	CASING WEARING RING	SUS316	4	
V21-13	SUBMERGED BEARING	RUBBER	1	SHELL: SUS316
V21-14	SUCTION STRAINER	SUS316	1	
V21-21	"O"RING	NBR	1	φ3
V23-11	CASING	SCS14	1	
V23-12	VOLUTE CASING	SCS14	1	
V23-13	VOLUTE CASING	SCS14	1	
V23-14	DISCHARGE CASING	SCS14	1	
V23-15	BUSHING	SUS316	1	
V23-16	SUBMERGED BEARING	RUBBER	1	SHELL: SUS316
V23-21	"O"RING	NBR	1	φ3
V23-22	"O"RING	NBR	1	φ3
V23-31	TIE BOLT	SUS316	8	WITH NUT
V24-11	COLUMN PIPE	SUS316L	1	LOWER
V24-11a	STUD BOLT	SUS316	1 SET	WITH NUTx2set
V24-11b	HEXAGON HEAD BOLT	SUS316	1 SET	WITH NUTx2set
V24-12	COLUMN PIPE	SUS316L	5	INTERMEDIATE
V24-12a	HEXAGON HEAD BOLT	SUS316	5 SETS	WITH NUT
V24-13	COLUMN PIPE	SUS316L	1	UPPER
V24-13a	HEXAGON HEAD BOLT	SUS316	1 SET	
V24-21	"O"RING	NBR	6	φ3
V24-22	"O"RING	NBR	1	φ3

符号 NO.	部品名称 PART NAME	材料 MATERIAL	数量 Q'TY	備考 REMARKS
V11-11	IMPELLER	SCS14	1	
V11-12	IMPELLER	SCS14	1	
V11-13	IMPELLER RING	SUS316	4	
V11-14	IMPELLER NUT	SUS316	2	
V11-21	LOWER SHAFT	SUS316	1	
V11-22	KEY	SUS316	1	
V11-23	KEY	SUS316	1	
V11-24	KEY	SUS316	1	
V11-25	KEY	SUS316	1	
V11-31	BEARING SLEEVE	SUS316	1	
V11-32	BEARING SLEEVE	SUS316	1	
V11-33	INTERSTAGE SLEEVE	SUS316	1	
V12-21	INTERMEDIATE SHAFT	SUS316	5	
V12-22	KEY	SUS316	5	
V12-23	KEY	SUS316	5	
V12-31	BEARING SLEEVE	SUS316	6	
V13-21	UPPER SHAFT	SUS316	1	
V13-22	KEY	SUS316	1	
V13-23	KEY	S45C	1	
V13-24	KEY	SUS316	1	
V13-31	PACKING SLEEVE	SUS316	1	
V13-32	SLEEVE CLAMP	SUS316	1	
V13-33	"O"RING	NBR	1	AS568 029
V14-11	SHAFT COUPLING	FC200	1	MOTOR SIDE
V14-12	SHAFT COUPLING	FC200	1	PUMP SIDE
V14-13	COUPLING BOLT	SS400	1 SET	WITH NUT & WASHER
V14-14	ADJUST NUT	S45C	1	
V14-15	SLIP RING	CAC502A	1	

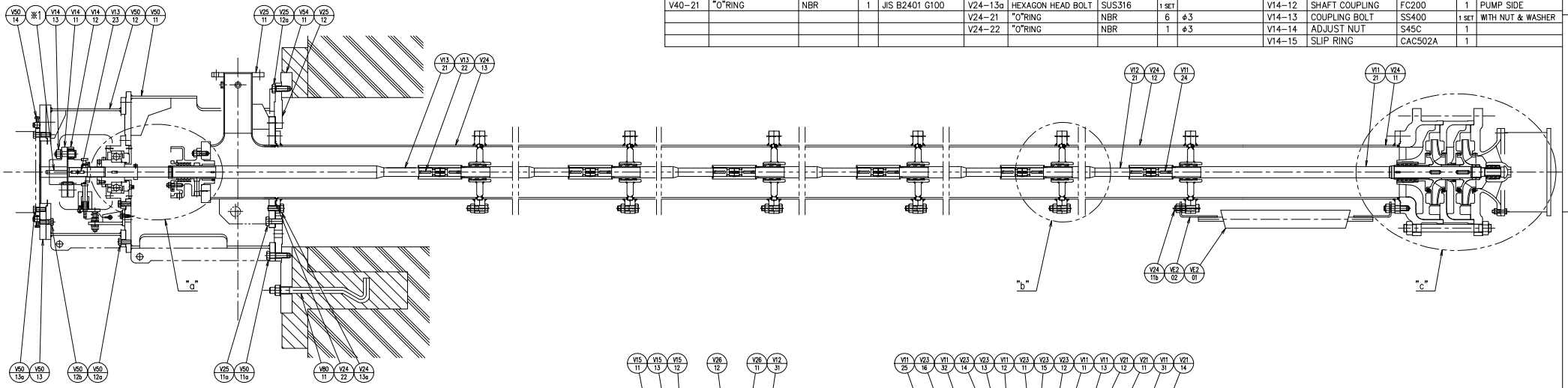

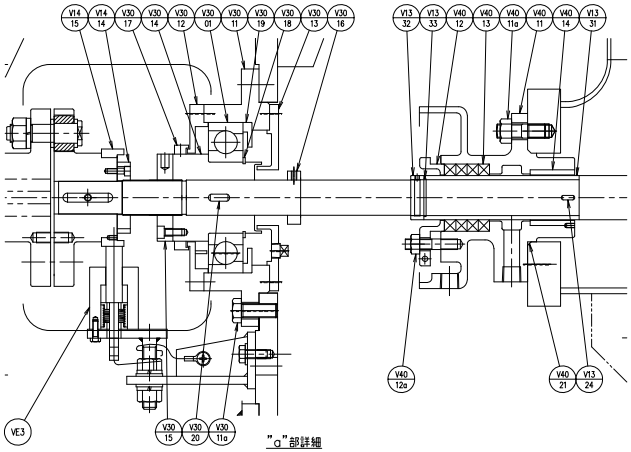

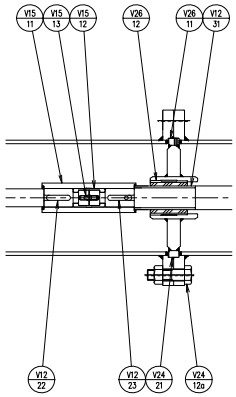

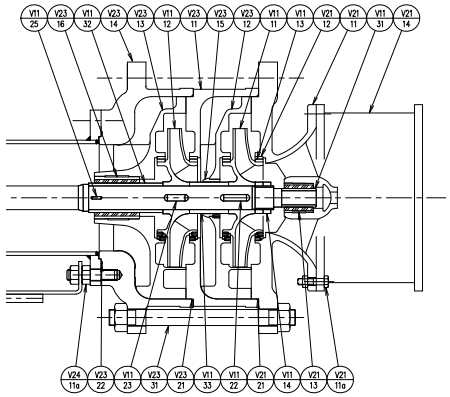

<KKS No.>
11PBB01 AP001, 11PBB01 AP002
12PBB01 AP001, 12PBB01 AP002

CUSTOMER : UBE TECHNO ENG CO., LTD.
USER : Nghi Son 1 Thermal Power Plant Construction Project
SERVICE : Screen Wash Pump

DATE	SERIAL NO.	DESCRIPTION	APPR.	CHECK	PREP.	REV.
2011/01/19	1110099	Revised as per comments.	SASA	SASA	KATSU	1
–	1110099	drawing up	–	–	–	0

承認 APPROVED BY 2011/01/18 SASA
調査 CHECKED BY 2011/01/18 SASA
作成 DRAWN BY 2011/01/12 KATSU
尺度 SCALE 1:Not
単位 UNITS mm

DMW CORPORATION 株式会社 電業社機械製作所

名称 TITLE: CROSS SECTIONAL DRAWING
100 VMF-R2-M
図番 DRAWING NO. 11-VS2T123-00004X

A1 POM | BORE : 100 | TYPE : VMF-R2-M | NACD : T123X
類似・参考図 : | 来歴 :